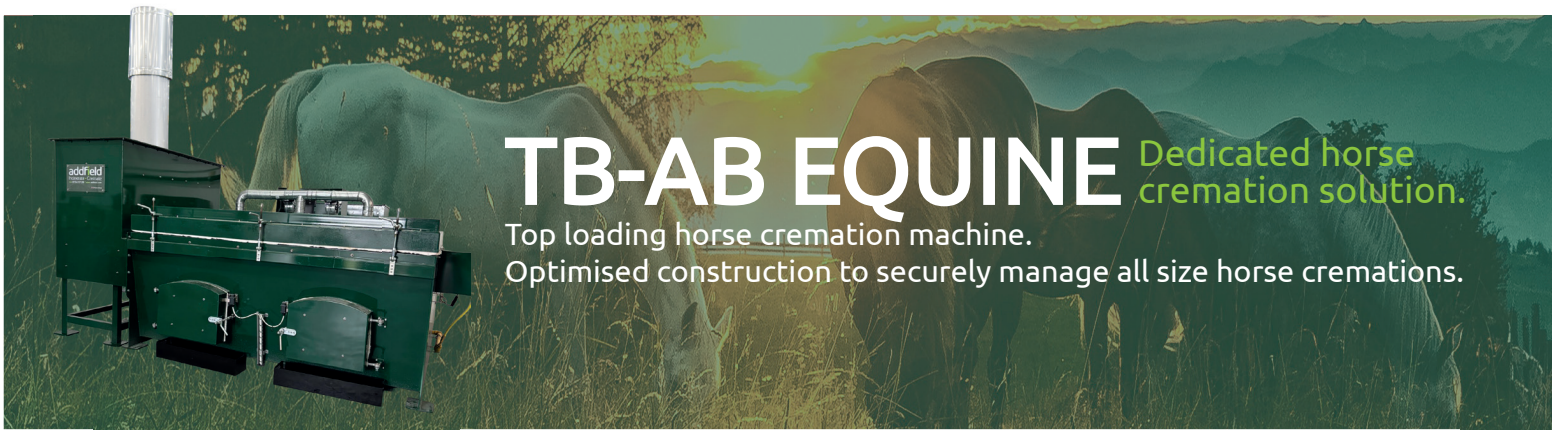

TB-AB EQUINE

Dedicated horse cremation solution.

Top loading horse cremation machine.
Optimised construction to securely manage all size horse cremations.

This TB AB Equine has been specifically optimised to deliver highly efficient cremations for horses of all sizes.

Having a multi-layered brick based refractory achieving a 40% reduction in fuel consumption compared to alternative solutions. Benefitting from four burners in the primary chamber, specially angled burners for optimal cremation efficiency and two front facing deashing doors.

DEFRA approved and compliant with EU Animal By Products Regulations. Additional adaptations are available to suit your pet crematorium.

Machine Specification

External L x W x H (mm)	4245 x 3530 x 2145/4030
Internal L x W x H (mm)	2445 x 1600 x 920
Chamber Volume (m^3)	4.18
Weight (approx tonnes)	6.5
Nominal Burn Rate UK* (kg/hr)	<45
Burn Rate [Export Only]* (kg/hr)	50 - 75
Thermal Capacity** (kW)	384
Power Supply 50/60 hz (single phase)	220 - 250v (single phase 110-120v on request)
Door Aperture	2385 x 1570
Control Panel	AIC
Fuel Types	Diesel, LPG, N-Gas
Insulation Board	25mm
Insulation Fire Brick	Grade E23
Fire Brick (Alumina)	42.5%

*We reserve the right to change the specification, dimensions and quality of materials from time to time, so long as the alteration is minor or an improvement to the said product.
**Actual not maximum. Please consult Addfield directly for gas set-up requirement.

Primary Chamber

- Pre-cast block impact zone protecting refractory lining during loading.
- Heavily insulated internal brick refractory, constructed along an interlocking systems to ensure maximum strength and resilience.
- Premium grade high alumina content refractory brickwork delivering optimal thermal retention.
- Top loading counter balanced insulated access lid.
- Temperature controlled waste ignition burner automatic on-off, complete with internal air fans.

Secondary Chamber

- Fully insulated internal refractory lining. Constructed from high grade low thermal mass insulation.
- Temperature controlled Secondary chamber burnout burner with automatic on-off control, complete with internal air fans.
- Integrated combustion burner air fans automatically controlling distribution to designated areas.
- Temperature sensor mounting point at the top of the chamber, ensuring the chamber reaches the required 850°C minimum, with a 2 second retention time.

Optional Extras

	De-ashing Tool	✓
	Pet & Horse Cremulator	✓
	Lift Table	✓
	Fuel Tank	✓
	Spares Kit & Servicing	✓

addfield Incinerate • Cremate

Addfield Environmental Systems Limited
Unit 9 | Zone 4 | Burntwood Business Park
Staffordshire | WS7 3XD | United Kingdom

© Addfield Environmental Systems Ltd. All information should be used as a guide only, specifications are subject to change without notice.

BRITISH BUILT

TB-AB EQUINE

Extra large equine cremation machine.

Loading and De-Ashing

Designed for top loading directly into the primary chamber. Loading can be manual or mechanically through winch or hydraulic bin tippler. To be loaded no more than once per day prior to operation. The incineration process will reduce the horse to approximately 3% volume ash. The ash should be removed before the following horse is loaded to ensure optimum burn rates. Optional de-ashing doors are available.

The Addfield Difference

- Pre-Fabricated 8mm & 10mm robust mild steel casing, seam welded and suitably stiffened/ braced where necessary.
- Optimised loading chamber for maximum operational capacity.
- Lightweight resilient refractory fibre insulated lid, providing a tight seal, giving excellent thermal efficiency.
- Counterweighted loading chamber lid for ease of use.
- Primary chamber lining thickness 180mm rated at 1450°C.
- Premium paint finish - Steel structures are painted using a two pack high grade paint system.
- Multi-layered refractory lining using fire bricks, insulation board and insulation bricks, improving thermal efficiency.

Additional Operation Equipment

Fuel Tank

Allowing you to operate the incinerator in all locations as well as providing a backup to your traditional supply. Available in 1000 to 5000 litre capacity. Fuel can be safely stored and monitored in close proximity to your incinerator.

De-ashing Tools

De-ashing tools increase the comfort of de-ashing the cremator. Associated with removing hot ash from the chamber of the cremator straight into the ash box, ready to be processed in the cremulator unit.

Equine Cremulator

Updated Equine cremulator constructed from rugged mild steel. Benefiting from a new pulverising system. Rapidly reducing bone fragments after the cremation process. into a fine, presentable ash in minutes.

addfield Incinerate • Cremate

Addfield Environmental Systems Limited
Unit 9 | Zone 4 | Burntwood Business Park
Staffordshire | WS7 3XD | United Kingdom

© Addfield Environmental Systems Ltd. All information should be used as a guide only, specifications are subject to change without notice.

BRITISH BUILT

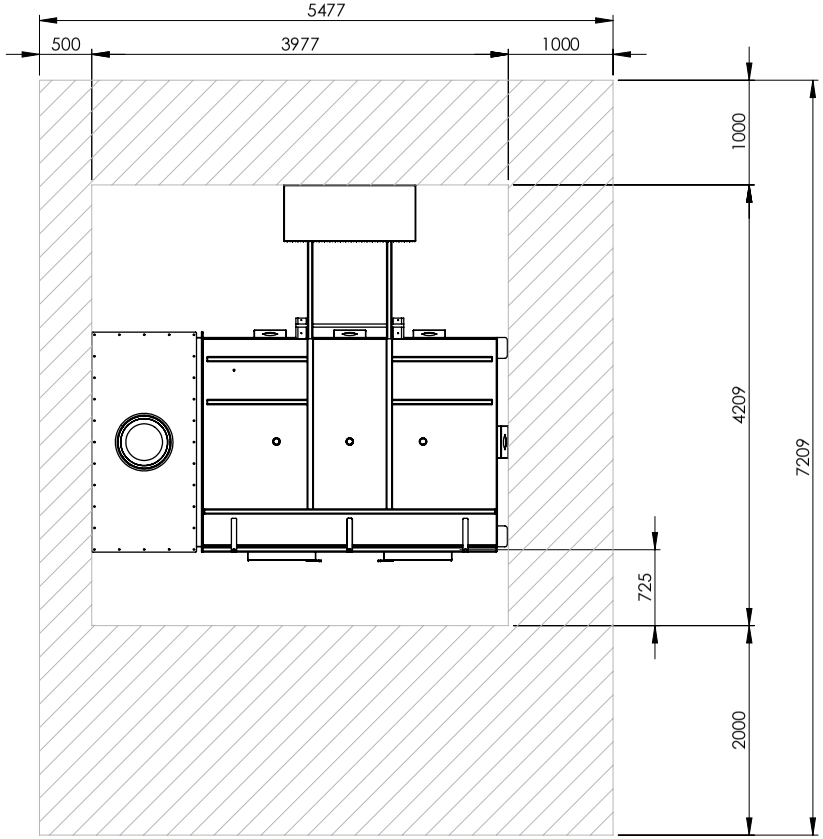

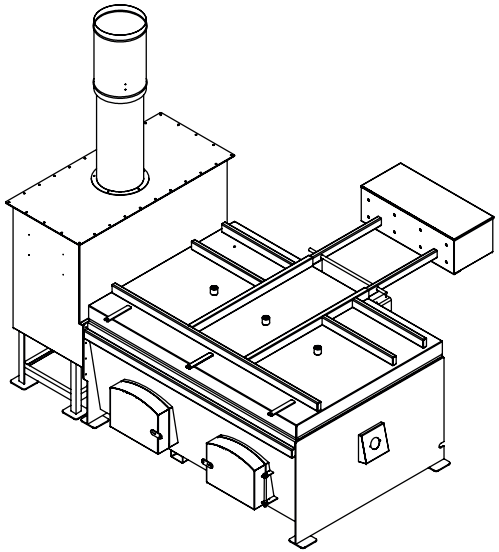

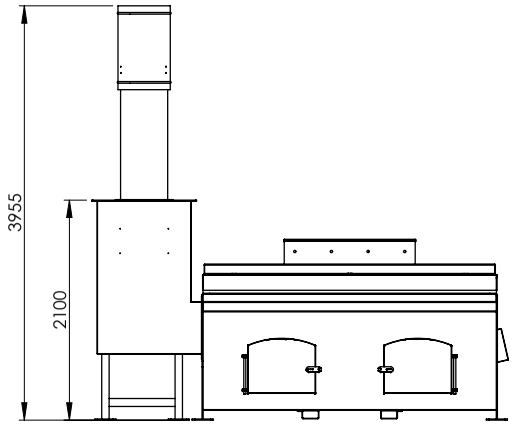

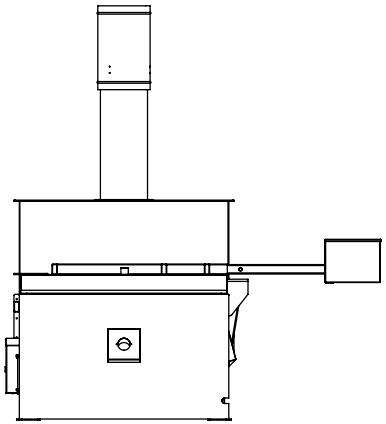

06-B4-DF2
CT = 1

MATERIAL:	FINISH:
N/A	N/A

WEIGHT: N/A

THIRD ANGLE PROJECTION
(UNLESS STATED OTHERWISE)

TOLERANCES UNLESS OTHERWISE STATED

FABRICATION		MACHINING		ANGULAR
2 to 30	± 1	0.5 up to 3	± 0.05	up to 400 ± 45'
>30 up to 120	± 2	>3 up to 6	± 0.05	>400 up to 1000 ± 30'
>120 up to 400	± 2	>6 up to 30	± 0.1	>1000 ± 20'
>400 up to 1000	± 3	>30 up to 120	± 0.15	
>1000 up to 2000	± 4	>120 up to 400	± 0.2	
>2000 up to 4000	± 6	>400 up to 1000	± 0.3	
>4000 up to 8000	± 8	>1000 up to 2000	± 0.5	
>8000 up to 12000	± 10	>2000 up to 4000	± 0.5	
>12000 up to 16000	± 12			
>16000 up to 20000	± 14			
>20000	± 16			

addfield
Incinerate • Cremate

T: +44 (0)1543 571 280
E: sales@addfield.com
www.addfield.com

Addfield Environmental Systems LTD
Unit 9, Zone 4
Burntwood Business Park
Staffordshire
WS7 3XD

PROJECT:

TBAB E

TITLE:

GA - E0

4	DATE	DRAWN	CHECKED	APPROVED
COMMENTS				
ZONES: XX				

3	DATE	DRAWN	CHECKED	APPROVED
COMMENTS				
ZONES: XX				

2	DATE	DRAWN	CHECKED	APPROVED
COMMENTS				
ZONES: XX				

1	DATE	DRAWN	CHECKED	APPROVED
COMMENTS				
ZONES: XX				

-	DATE	DRAWN	CHECKED	APPROVED
	11/08/2025	A.SKIDMORE		
COMMENTS				

Addfield Environmental Systems LTD
This drawing and any information or descriptive material set out on it are the confidential and copyright property of Addfield Enviromental Systems, and MUST NOT BE DISCLOSED, COPIED, LOANED in whole or part or used for any purpose without the written permission of Addfield Enviromental Systems.

DRAWING No.	REV
6-001-20	-

SHEET 1 OF 1	SCALE: 1:50	A3