Medical

MP-500

The MP Range is purpose built for clean efficient waste destruction.

The MP range is specially designed for safely incinerating hazardous high moisture biological red bag waste.

The MP-500 is the largest of the MP range of medical waste incinerators. Securely destroying a complete range of Medical, Pathological and Clinical waste.

Designed and built along the latest advances in medical incineration. Benefiting from Hot Hearth technology, efficiently recycling heath throughout and below the primary chamber, delivering complete 360° heating.

Unrivalled in it's field boasting a 40% reduction in fuel consumption compared to alternative solutions. The MP-500 is ideally suited for facilities of between 600-750 beds and equivalent.

Machine Specification

External L x W x H (mm)	3961 x 1150 x 1950/3600
Internal L x W x H (mm)	2400 x 675 x 700
Chamber Volume (m³)	1.13
Weight (approx tonnes)	5
Nominal Burn Rate (kg/hr)	<75
Power Supply 50/60 hz (single phase)	220 - 240v (single phase 110-120v on request)
Thermal Capacity** (kW)	390
Door Aperture	675 x 550
Hot Hearth Principle	Double Pass
Fuel Types	Diesel, LPG, N-Gas
Control Panel	AIC
Insulation Board	25mm
Insulation Fire Brick	Grade E23
Fire Brick (Alumina)	42.5%

*We reserve the right to change the specification, dimensions and quality of materials from time to time, so long as the alteration is minor or an improvement to the said product.
**Actual not maximum. Please consult Addfield directly for gas set-up requirement.

Primary Chamber

- Heavily insulated internal refractory lining. Constructed from high grade refractory brick ensuring a secure self supporting, interlocking arrangement.
- Manually opening, securely locking, access door with viewing port.
- Automatic temperature controlled on-off waste ignition burner complete with internal air fans.
- Hot Hearth Combustion Burner, temperature controlled on-off, complete with internal air fans.
- Secondary combustion burner air fans, automatically controlled distribution to their designated area.
- Two temperature sensor mounting points.

Secondary Chamber

- Fully insulated internal refractory lining. Constructed from high grade refractory brick and low thermal mass insulation.
- Secondary chamber burnout burner, temperature controlled on-off complete with internal air fans
- Automatically controlled integrated combustion burner air fans.
- Temperature sensor mounting point at the base of the exit flue ensuring the chamber reaches the necessary 1100°C minimum, with a 2 second retention time.

Waste Type

	Clinical Waste	✓
	Treated Waste	✓
	Anatomical Waste	✓
	Cytotoxic & Cytostatic Waste	✓
	Offensive/Hygiene Waste	✓
	Medicinal Waste	✓

addfield Incinerate • Cremate

Addfield Environmental Systems Limited
Unit 9 | Zone 4 | Burntwood Business Park
Staffordshire | WS7 3XD | United Kingdom

© Addfield Environmental Systems Ltd. All information should be used as a guide only, specifications are subject to change without notice.

BRITISH BUILT

Medical

MP-500

The MP Range is purpose built for clean efficient waste destruction.

Waste Loading and De-Ashing

The MP series of incinerators are ergonomically designed for easy and safe loading of all medical waste streams. Loading through the front facing door can be completed manually or with the aid of a hydraulic lifting table. The MP machines can be loaded multiple times throughout a cycle. At the end of every incineration process, ash should be discharged through the loading door onto the supplied deashing tray prior to being loaded for the next burn.

The Addfield Difference

- Pre-Fabricated 8mm & 10mm robust mild steel casing, seam welded and suitably stiffened/ braced where necessary.
- Lightweight resilient refractory fibre insulation door, providing a tight seal, giving excellent thermal efficiency.
- Primary and secondary chamber lining thickness 180mm rated up-to 1650°C.
- Premium paint finish - Steel structures are painted using a two-pack high grade paint system.
- Unique Hot Hearth technology enabling increased efficiency of incineration by providing additional heating below the chamber encouraging 360° heat distribution.
- Multi-layered refractory lining using fire bricks, insulation board and insulation bricks, improving thermal efficiency.

Additional Operation Equipment

Bin Tipper

The safest way to load hazardous waste directly into top loading ram loaders. Hands free operation for up to 150kg, compatible with the majority of waste bins. Reliable hydraulically operated mechanism.

Ram Loader

Built to enable the option of continuous loading throughout operation. Securely positioning waste into the primary chamber whilst maintaining temperature and preventing radiant heat and thermal shock.

Venturi System

An advanced flue gas treatment system designed to further reduce dust, acid gasses, dioxins and furans. Highly effective the venturi is widely regarded as the leading treatment system in its field.

addfield Incinerate • Cremate

Addfield Environmental Systems Limited
Unit 9 | Zone 4 | Burntwood Business Park
Staffordshire | WS7 3XD | United Kingdom

© Addfield Environmental Systems Ltd. All information should be used as a guide only, specifications are subject to change without notice.

BRITISH BUILT

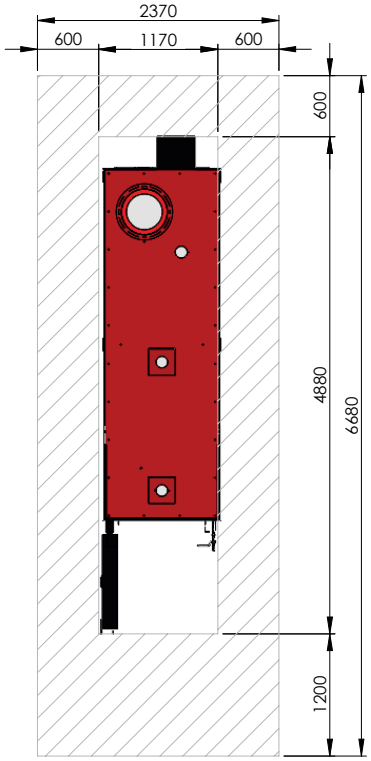

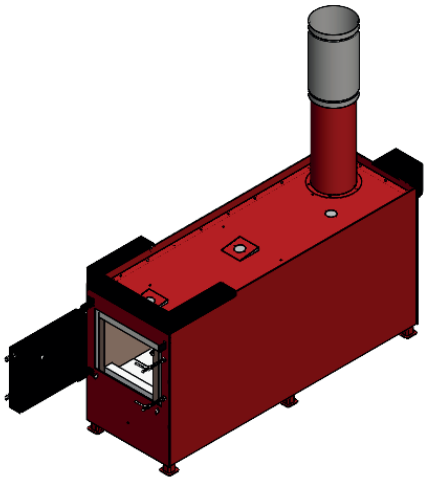

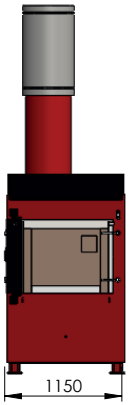

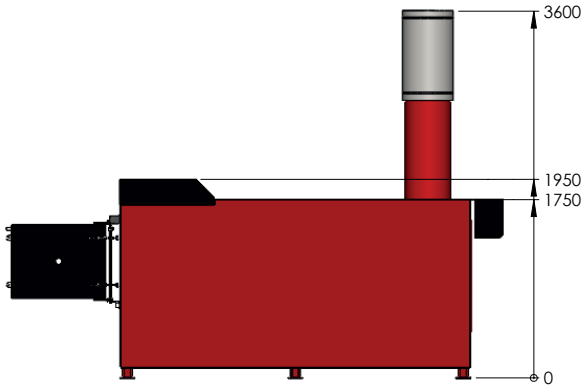

MATERIAL: N/A

FINISH: N/A

WEIGHT: 5742.87 Kg

THIRD ANGLE PROJECTION (UNLESS STATED OTHERWISE)

TOLERANCES UNLESS OTHERWISE STATED

FABRICATION		MACHINING		ANGULAR
2 to 30	± 1	0.5 up to 3	± 0.05	up to 400 ± 45'
>30 up to 120	± 2	>3 up to 6	± 0.05	>400 up to 1000 ± 30'
>120 up to 400	± 2	>6 up to 30	± 0.1	>1000 ± 20'
>400 up to 1000	± 3	>30 up to 120	± 0.15	
>1000 up to 2000	± 4	>120 up to 400	± 0.2	
>2000 up to 4000	± 6	>400 up to 1000	± 0.3	
>4000 up to 8000	± 8	>1000 up to 2000	± 0.5	
>8000 up to 120000	± 10	>2000 up to 4000	± 0.5	
>12000 up to 16000	± 12			
>16000 up to 20000	± 14			
>20000	± 16			

addfield
Incinerate • Cremate

T: +44 (0)1543 571 280
E: sales@addfield.com
www.addfield.com

Addfield Environmental Systems LTD
Unit 9, Zone 4
Burntwood Business Park
Staffordshire
WS7 3XD

PROJECT:

MP 500

TITLE:

Sale GA

	DATE	DRAWN	CHECKED	APPROVED
D				
C				
B				
A				
-	24/10/2022	A.SKIDMORE		

COMMENTS: ISSUE FOR MANUFACTURE

ZONES: XX

Addfield Environmental Systems LTD
This drawing and any information or descriptive material set out on it are the confidential and copyright propertyof Addfield Enviromental Systems, and MUST NOT BE DISCLOSED, COPIED, LOANED in whole or part or used for any purpose without the written permission of Addfield Enviromental Systems.

DRAWING No. MP500 Sale GA

REV -

SHEET 1 OF 1

SCALE: 1:50

A3