Agriculture

MINI PLUS

Designed to incinerate all forms of agricultural waste.

Mid-sized agricultural incinerator, ideal solution for poultry, sheep, swine and butchery waste disposal.

Maintain your biosecurity through securely destroying a complete range of Agricultural and Farm waste. Designed and built along the latest advances in animal incineration.
Achieving a 40% reduction in fuel consumption compared to alternative solutions, through having a multi layered brick based refractory.

Top loading with impact resistant reinforced concrete blocks for hard wearing easy operation.

DEFRA approved and compliant with EU Animal By Products Regulations.

Machine Specification

External L x W x H Including Chimney (mm)	3325 x 2540 x 1890/3775
Internal L x W x H (mm)	1320 x 1100 x 700
Chamber Volume (m^3)	1
Weight (approx tonnes)	3
Nominal Burn Rate UK* (kg/hr)	<50
Burn Rate [Export Only]* (kg/hr)	50 - 75
Thermal Capacity** (kW)	144
Power Supply 50/60 hz (single phase)	220 - 240v (single phase 110-120v on request)
Door Aperture	1265 x 1070
Control Panel	AIC
Fuel Types	Diesel, LPG, N-Gas
Insulation Board	25mm
Insulation Fire Brick	Grade E23
Fire Brick (Alumina)	42.5%

*We reserve the right to change the specification, dimensions and quality of materials from time to time, so long as the alteration is minor or an improvement to the said product.
**Actual not maximum. Please consult Addfield directly for gas set-up requirements.

Primary Chamber

- Pre-cast block impact zone protecting refractory lining during loading.
- Heavily insulated internal brick refractory, constructed along an interlocking systems to ensure maximum strength and resilience.
- Premium grade high alumina content refractory brickwork delivering optimal thermal retention.
- Top loading counter balanced insulated access lid.
- Temperature controlled waste ignition burner automatic on-off, complete with internal air fans.

Secondary Chamber

- Fully insulated internal refractory lining. Constructed from high grade low thermal mass insulation.
- Temperature controlled Secondary chamber burnout burner with automatic on-off control, complete with internal air fans.
- Integrated combustion burner air fans automatically controlling distribution to designated areas.
- Temperature sensor mounting point at the top of the chamber, ensuring the chamber reaches the required 850°C minimum, with a 2 second retention time.

Recommended Waste Types

Game	✓
Poultry & Chickens	✓
Butchery Waste	✓
Sheep & Lambs	✓

addfield Incinerate • Cremate

Addfield Environmental Systems Limited
Unit 9 | Zone 4 | Burntwood Business Park
Staffordshire | WS7 3XD | United Kingdom

© Addfield Environmental Systems Ltd. All information should be used as a guide only, specifications are subject to change without notice.

BRITISH BUILT

Agriculture

MINI PLUS

Designed to incinerate all forms of agricultural waste.

Waste Loading and De-Ashing

The agricultural range of incinerators are designed for top loading directly into the primary chamber. Loading can be manual or mechanically through digger or hydraulic bin tipper. To be loaded no more than once per day prior to operation. The incineration process will reduce the waste to approximately 3% volume, ash. The ash should be removed before the following waste is loaded to ensure optimum burn rates.
Optional de-ashing doors are available.

The Addfield Difference

- Pre-Fabricated 8mm & 10mm robust mild steel casing, seam welded and suitably stiffened/ braced where necessary.
- Optimised loading chamber for maximum operational capacity.
- Lightweight resilient refractory fibre insulated lid, providing a tight seal, giving excellent thermal efficiency.
- Counterweighted loading chamber lid for ease of use.
- Primary chamber lining thickness 180mm rated up-to 1450°C
- Premium paint finish - Steel structures are painted using a two pack high grade paint system.
- Multi-layered refractory lining using fire bricks, insulation board and insulation bricks, improving thermal efficiency.

Additional Operation Equipment

Bin Tipper

The Bin Tipper unit empties waste within the bin using a unique electro-hydraulic mechanism that can lift and tip more than 150kg. Hands free loading ensures operators safety, when dealing with hazardous waste.

Fuel Tank

Allowing you to operate the incinerator in all locations as well as providing a backup to your traditional supply. Available in 1000 to 5000 litre capacity. Fuel can be safely stored and monitored in close proximity to your incinerator.

Control Panel

Specially designed control panels, to manage your incineration. Pre-programmed and able to be manually adjusted for optimal results. Push button and touch screen control with optional data logging system.

addfield Incinerate • Cremate

Addfield Environmental Systems Limited
Unit 9 | Zone 4 | Burntwood Business Park
Staffordshire | WS7 3XD | United Kingdom

© Addfield Environmental Systems Ltd. All information should be used as a guide only, specifications are subject to change without notice.

BRITISH BUILT

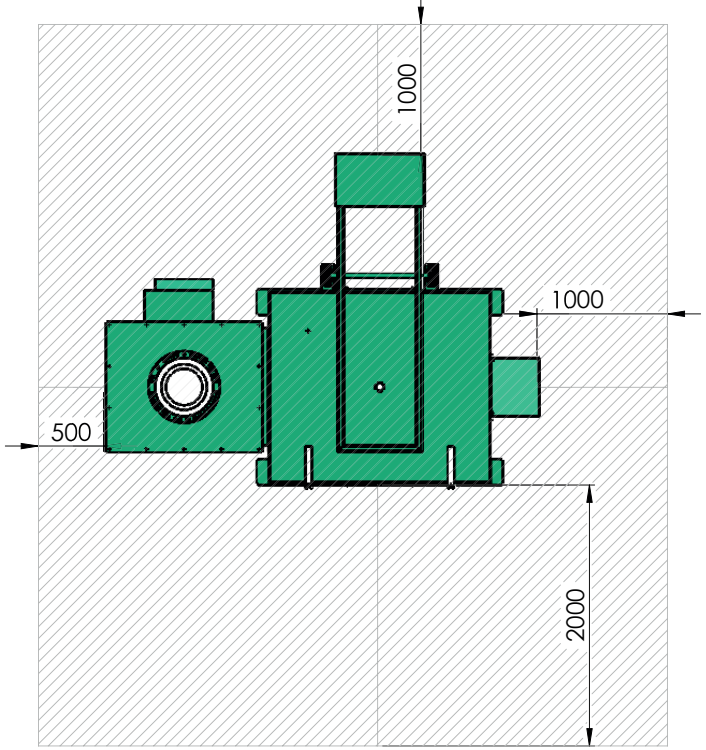

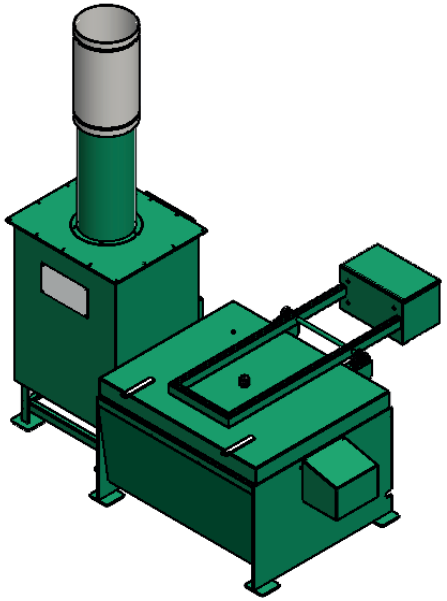

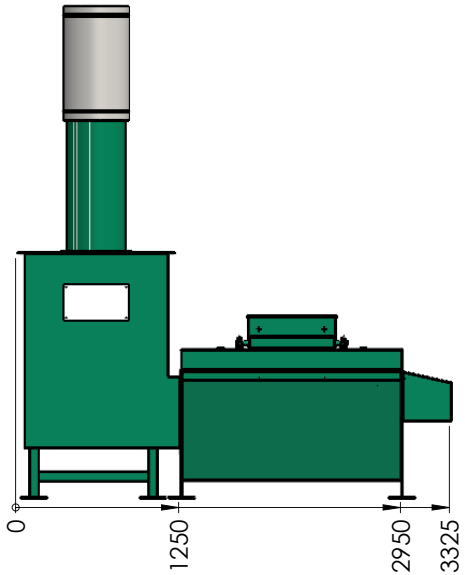

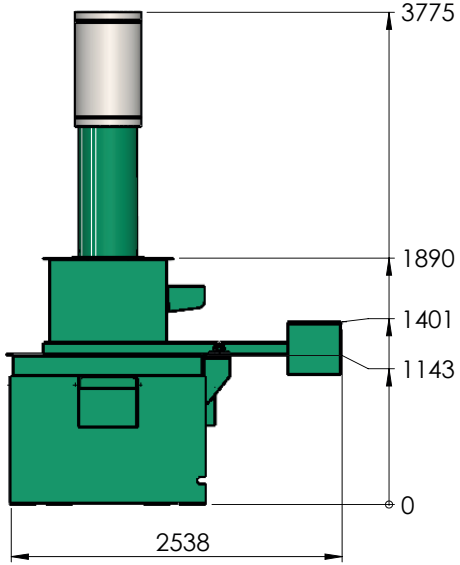

MATERIAL: N/A

FINISH: N/A

WEIGHT: 2478.18 Kg

THIRD ANGLE PROJECTION
(UNLESS STATED OTHERWISE)

TOLERANCES UNLESS OTHERWISE STATED

FABRICATION		MACHINING		ANGULAR
2 to 30	± 1	0.5 up to 3	± 0.05	up to 400 ± 45'
>30 up to 120	± 2	>3 up to 6	± 0.05	>400 up to 1000 ± 30'
>120 up to 400	± 2	>6 up to 30	± 0.1	>1000 ± 20'
>400 up to 1000	± 3	>30 up to 120	± 0.15	
>1000 up to 2000	± 4	>120 up to 400	± 0.2	
>2000 up to 4000	± 6	>400 up to 1000	± 0.3	
>4000 up to 8000	± 8	>1000 up to 2000	± 0.5	
>8000 up to 120000	± 10	>2000 up to 4000	± 0.5	
>12000 up to 16000	± 12			
>16000 up to 20000	± 14			
>20000	± 16			

addfield
Incinerate • Cremate

T: +44 (0)1543 571 280
E: sales@addfield.com
www.addfield.com

Addfield Environmental Systems LTD
Unit 9, Zone 4
Burntwood Business Park
Staffordshire
WS7 3XD

PROJECT:
Mini Plus Standard

TITLE:
GA

	DATE	DRAWN	CHECKED	APPROVED
D				
C				
B				
A				
-	24/01/2022	A.SKIDMORE		

COMMENTS

ZONES: XX

ISSUE FOR MANUFACTURE

Addfield Environmental Systems LTD
This drawing and any information or descriptive material set out on it are the confidential and copyright propertyof Addfield Enviromental Systems, and MUST NOT BE DISCLOSED, COPIED, LOANED in whole or part or used for any purpose without the written permission of Addfield Enviromental Systems.

DRAWING No. Mini Plus Sale GA

REV -

SHEET 1 OF 1

SCALE: 1:40

A3