Medical

C200 Highly robust high throughput medical waste incinerator.

The C200 medical incinerator is ideal for general clinical waste produced by hospitals and laboratories. With a burn rate up-to 200kg/hr.

The C200 is a high capacity clinical incinerator, designed to handle waste such as hazardous, laboratory or pharmaceutical. Having a front-loading design, enabling a safe and easy method for continuous loading of waste.

Biosecurity is a growing concern for hospitals across the globe, the implementation of an Addfield C200 can improve your ability to safely destroy contaminated waste.

The following information details the many features, specifications and optional equipment associated with our C200 incinerator.

Machine Specification

External L x W x H (mm)	3750 x 4955 x 3800/5961
Internal L x W x H (mm)	3035 x 1340 Ø
Chamber Volume (m^3)	4.28
Weight (approx tonnes)	12
Nominal Burn Rate	<200
Thermal Capacity (kW)	740
Power Supply 50/60 hz (3 Phase)	380v
Door Aperture	1340 Ø
Control Panel	PLC
Fuel Types	Diesel, LPG, N-Gas
Fire Brick (Alumina)	42.5%
Insulation Fire Brick	Grade E23

*We reserve the right to change the specification, dimensions and quality of materials from time to time, so long as the alteration is minor or an improvement to the said product.

Primary Chamber

- Fully insulated internal refractory lining, constructed from high grade refractory brick ensuring a self-supporting, interlocking arrangement.
- Fully interlocked, manually operated, access door.
- Waste ignition burner, temperature controlled on-off, complete with internal air fans.
- Combustion burner, temperature controlled on-off, complete with internal air fans.
- Primary combustion burner air fans with automatically controlled distribution to their designated area.
- One temperature sensor mounting points.

Secondary Chamber

- Fully insulated internal refractory lining, constructed from low thermal mass insulation.
- Secondary chamber burnout burner, temperature controlled on-off, complete with internal air fans.
- Integrated combustion burner air fans with automatically controlled distribution to their designated area.
- All combustion fuel pipework.
- All electrical components.
- One temperature sensor mounting point at the base of the exit flue ensuring the chamber reaches the necessary 1100°C minimum.

Waste Type

	Clinical Waste	✓
	Treated Waste	✓
	Anatomical Waste	✓
	Cytotoxic & Cytostatic Waste	✓
	Offensive/Hygiene Waste	✓
	Medicinal Waste	✓
	Domestic (municipal) Waste	✓

addfield Incinerate • Cremate

Addfield Environmental Systems Limited
Unit 9 | Zone 4 | Burntwood Business Park
Staffordshire | WS7 3XD | United Kingdom

© Addfield Environmental Systems Ltd. All information should be used as a guide only, specifications are subject to change without notice.

BRITISH BUILT

Medical

C200 The most robust reliable and efficient incinerators available anywhere.

Waste Loading and De-Ashing

The C200 incinerator is designed for front loading only through the main access door. At the end of every incineration process, ash should be discharged through the loading door into the supplied catcher tray prior to being loaded for the next burn. When de-ashing the machine, make sure that all of the correct PPE is worn, this is to protect yourself from the heat existing the machine.

The Addfield Difference

- Pre-fabricated 8mm & 10mm robust mild steel casing, seam welded and suitably stiffened/ braced where necessary.
- Lightweight resilient refractory fibre insulation door, providing a tight seal, giving excellent thermal efficiency.
- Primary & secondary chamber lining, rated at 1650°C.
- Built in chamber door viewing port for mid cycle and optimised viewing of waste during process.
- Paint finishing – The steel structures are painted using a two-pack high grade paint system.
- With a choice of an AI or PLC Controller, customisable programs can cut your operations times.
- A high quality module refractory lining, using fire bricks and insulation bricks, improving thermal efficiency.

Additional Operation Equipment

Waste Hopper

The optional hopper is perfect for offering a safe and continuous loading of waste equipped with an automatic operated door for loading waste into the centre of the primary chamber.

Bin Tipper

The safest way to load hazardous waste directly into top loading ram loaders. Hands free operation for up to 150kg, compatible with the majority of waste bins. Reliable hydraulically operated mechanism.

Venturi System

An advanced flue gas treatment system designed to further reduce dust, acid gasses, dioxins and furans. Highly effective the venturi is widely regarded as the leading treatment system in its field.

addfield Incinerate • Cremate

Addfield Environmental Systems Limited
Unit 9 | Zone 4 | Burntwood Business Park
Staffordshire | WS7 3XD | United Kingdom

© Addfield Environmental Systems Ltd. All information should be used as a guide only, specifications are subject to change without notice.

BRITISH BUILT

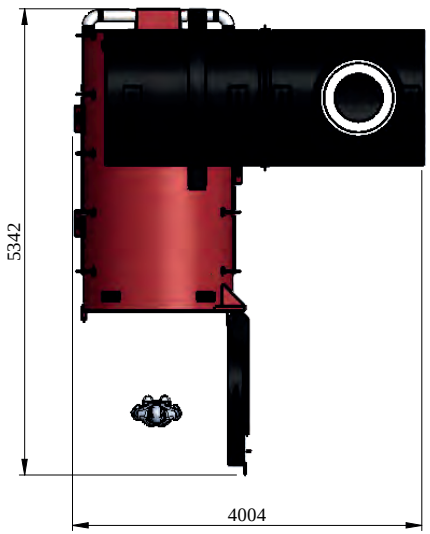

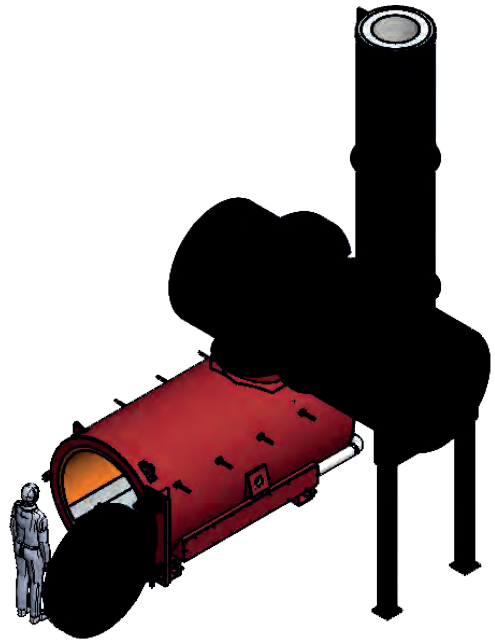

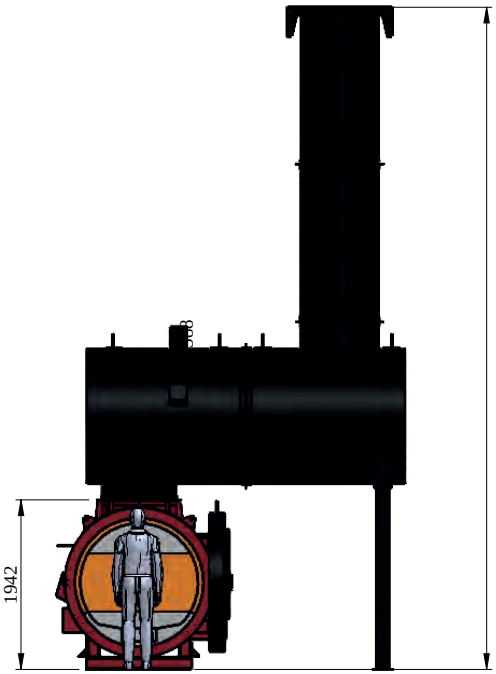

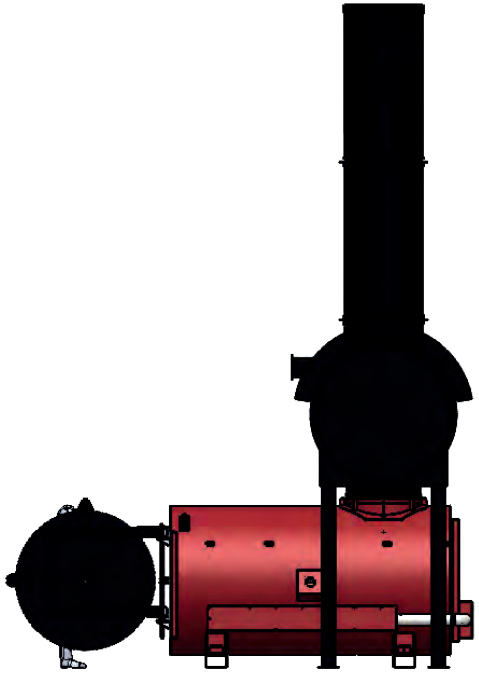

MATERIAL:	FINISH:
N/A	N/A

WEIGHT: 13098.02 Kg

THIRD ANGLE PROJECTION
(UNLESS STATED OTHERWISE)

TOLERANCES UNLESS OTHERWISE STATED

FABRICATION		MACHINING		ANGULAR
2 to 30	± 1	0.5 up to 3	± 0.05	up to 400 ± 45'
>30 up to 120	± 2	>3 up to 6	± 0.05	>400 up to 1000 ± 30'
>120 up to 400	± 2	>6 up to 30	± 0.1	>1000 ± 20'
>400 up to 1000	± 3	>30 up to 120	± 0.15	
>1000 up to 2000	± 4	>120 up to 400	± 0.2	
>2000 up to 4000	± 6	>400 up to 1000	± 0.3	
>4000 up to 8000	± 8	>1000 up to 2000	± 0.5	
>8000 up to 120000	± 10	>2000 up to 4000	± 0.5	
>12000 up to 16000	± 12			
>16000 up to 20000	± 14			
>20000	± 16			

addfield
Incinerate • Cremate

T: +44 (0)1543 571 280
F: +44 (0)1543 571 173
E: sales@add eld.com
www.add eld.com

Add eld Environmental Systems LTD
Unit 9, Zone 4
Burntwood Business Park
Sta ordshire
WS7 3XD

PROJECT:

C200 S

TITLE:

Sale GA

	DATE	DRAWN	CHECKED	APPROVED
D				
C				
B				
A				
-	04/08/2022	A.SKIDMORE		

COMMENTS

ZONES: XX

ISSUE FOR MANUFACTURE

Add eld Environmental Systems LTD
This drawing and any information or descriptive material set out on it are the con dential and copyright propertyof Add eld Enviromental Systems, and MUST NOT BE DISCLOSED, COPIED, LOANED in whole or part or used for any purpose without the written permission of Add eld Enviromental Systems.

DRAWING No. C200 S Sale GA

REV -

SHEET 1 OF 1

SCALE: 1:60

A3

Control Panel

Addfield Intelligent PLC Controller

Simple to operate adaptive control system for achieving optimal results from your machine.

CHAS | defra Approved | QUALITY ASSURED FIRM ISO9001:2015 | QUALITY ASSURED FIRM ISO14001:2015

Controller Features

The Addfield PLC Controller has been developed to provide you with a simple yet effective operational process. Designed around a touch screen HMI interface, and independent burner control buttons and switches.

The touch screen interface provides all of your essential operations at the press of a finger. Having pre-loaded programmes optimised for your individual requirements, waste type and operating regime.

Giving you instant access to live temperature readings for the primary and secondary chambers and remaining burn time to enable you to manage your incineration process more efficiently.

Simple to install with a plug and play interface which enables straight forward installation and maintenance.

Built in data-logging to automatically records you usage, timings and temperatures achieved. Archives all essential which is able to be exported to Excel through the removable USB drive.

Complete with the addition of an emergency stop button to instantly cancel all operations.

Key Features

- Plug and play design
- Zone ramp sequence multi zone controller.
- Incoming and outgoing cable terminations.
- Burner control gear.
- Interface relays and contractors.
- Temperature indication and control of the primary chamber.
- Temperature indication and control of the secondary chamber.
- Plant status indicators.
- Cycle status indicators.
- Fault status indicators.
- Operator interface.
- Data-logging.
- Schematic overview.
- USB Port.
- Emergency Stop button.

*We reserve the right to change the specification, dimensions and quality of materials from time to time, so long as the alteration is minor or an improvement to the said product.

© Addfield Environmental Systems Ltd. All information should be used as a guide only, specifications are subject to change without notice.

MADE IN BRITAIN

Medical

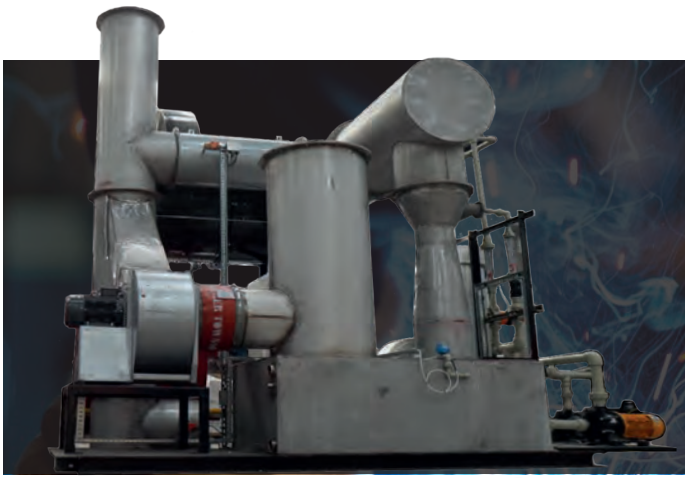

VENTURI SYSTEM

The Addfield 'Venturi' system is a highly developed, stainless steel engineered, flue gas scrubber. Built to provide additional cleaning of exhaust gasses. Removing and neutralising particulates and airborne by-products.

The Addfield 'Venturi' is an advanced flue gas treatment system installed to reduce dust, acid gasses, dioxins and furans produced as a result of incinerating specific waste types. Cleaning at a microscopic level this system is able to be connected to any machine in the Addfield range. The Venturi system can be scaled according to the final specification of the incinerator to ensure that environmental results are consistently achieved.

Housed within insulated heavy duty stainless steel and consisting of three core parts. The converging, throat, and diverging section. Each essential to ensure that flue gasses are reliably cleaned before returning into the environment. This system produces a highly effective turbulent environment for flue gas scrubbing.

Addfield Venturi system includes several essential safety features not found on standard wet scrubbers.

CHAS | defra Approved | QUALITY ASSURED FIRM ISO9001:2015 | QUALITY ASSURED FIRM ISO14001:2015

Venturi systems in operation.

1/ Liquid is introduced at the entrance of the **converging** section.
2/ The incineration gasses are forced to move at extremely high velocities in the small **throat** section.
3/ This shears the liquid from its walls subsequently producing an enormous number of very tiny droplets.
4/ Particulate and gas removal occurs in the **diverging** section as the inlet gas stream mixes with the plume of tiny liquid droplets.
5/ The inlet stream then exits the **diverging** section, where it is forced to slow down before returning to the environment through the chimney stack.

Machine Specification

Material Construction	304 Stainless Steel Venturi Mild Steel Painted Ducting Aluminium Over Cladding
Emergency Relief System	Fail Open Spring Valve
Condenser	1, Intergrated
Atomiser Construction	316L Stainless
Atomiser Number	2
PH Neutraliser Feedstock	Caustic Soda
PH Neutraliser Tank Size	500L
PH Neutraliser Controller	Electronic Solenoid Controlled
Main Tank Size	690L
Fill System	1. Automatic
Drain System	1, Manual
Overflow	1
ID Fan	1, Automatic Speed Controlled
Temperature Sensors	1
Skid Mounted	Yes
Site Utilities	Electricity 4 Wire Caustic Soda Town Water

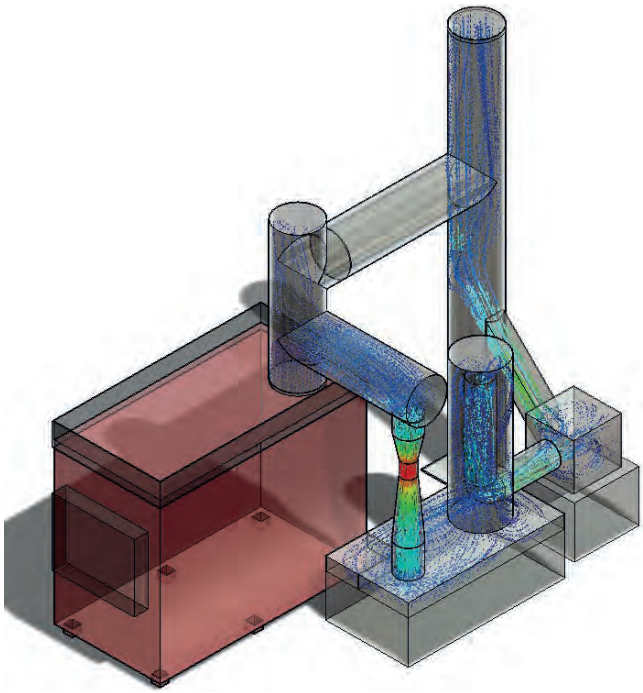

*We reserve the right to change the specification, dimensions and quality of materials from time to time, so long as the alteration is minor or an improvement to the said product.

addfield Incinerate • Cremate

Addfield Environmental Systems Limited
Unit 9 | Zone 4 | Burntwood Business Park
Staffordshire | WS7 3XD | United Kingdom

© Addfield Environmental Systems Ltd. All information should be used as a guide only, specifications are subject to change without notice.

BRITISH BUILT

Medical

VENTURI SYSTEM

Particle suppressant system removing heavy particulates from exhaust gas using water injected and atomised into the incoming exhaust gas stream.

Closed Loop Hydrolisis

To provide a consistently environmental cleaning process, the Addfield Venturi system operates along a closed loop system for all liquids. Stored in the enclosed secure water tank whilst in operation. The waste water can then be disposed of safely following your regions regulations. The benefits of a closed loop is increased effectiveness and environmental security compared to open systems which you may find on inferior wet scrubbers.

360° Gas Cleaning

A Venturi flue gas cleaner collects both particulate and gaseous pollutants. These are collected and stored at the base of the scrubber in the settling tank.

The water tank is equipped with an automatic levelling system and a drain for waste water. System losses are overcome with an ID (induced draught) fan. This dynamically controls the flow of the system preventing inadequate scrubbing of the flue gas. The ID fan also prevents pressurisation of the incinerator by maintaining gas velocities within the scrubber at a constant rate.

Caustic Soda can be added to water, with the resulting slurry sprayed into the flue gas scrubber. This process is proven to be more efficient than water alone, removing over 95% of sulphur dioxide.

Key Venturi Features

Condenser System

A quencher, situated between the secondary chamber and the venturi. Integrating a two-zone spray system. The first lowers the temperature and the second encapsulates particles before the venturi in preparation for cleaning.

Emergency Bypass

A fail-safe system protecting the venturi in event of a power cut. Automatically triggered in the case of loss of power. The Bypass allows excess heat to escape from the system protecting the fans and integrity of the system.

Sorbent Injection

Instrumental in neutralising the pH level of most common forms of waste treated with a Venturi. A fully automatic sorbent injection ensures safe and neutral flue gas exits the system protecting the users and environment.

addfield Incinerate • Cremate

Addfield Environmental Systems Limited
Unit 9 | Zone 4 | Burntwood Business Park
Staffordshire | WS7 3XD | United Kingdom

© Addfield Environmental Systems Ltd. All information should be used as a guide only, specifications are subject to change without notice.

BRITISH BUILT

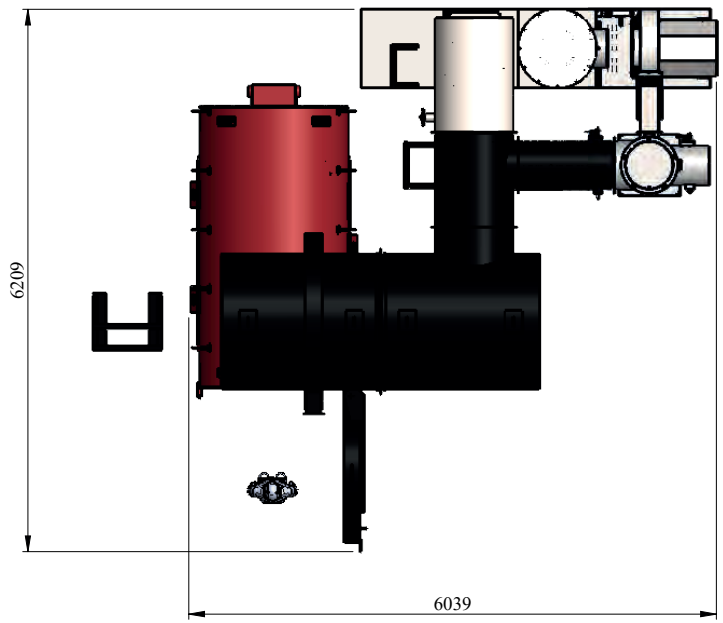

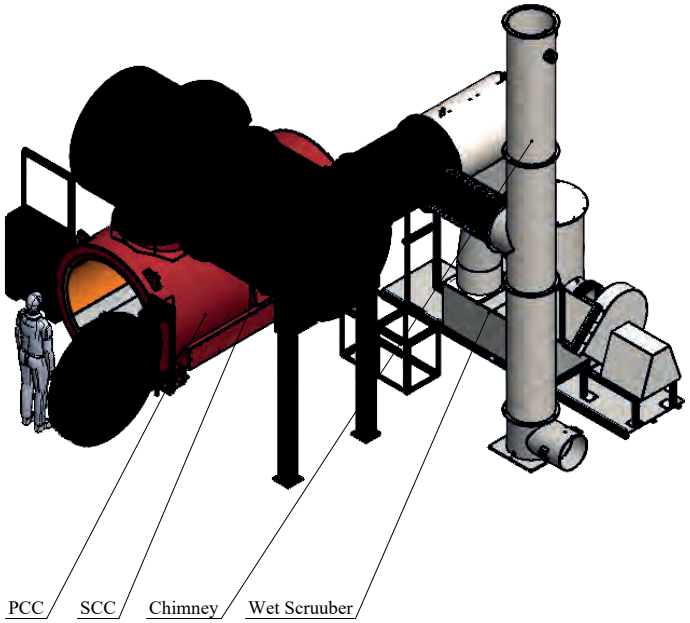

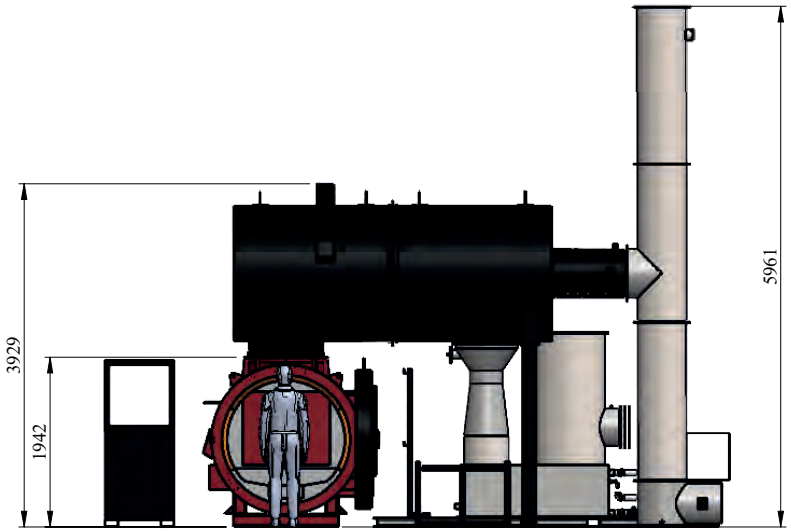

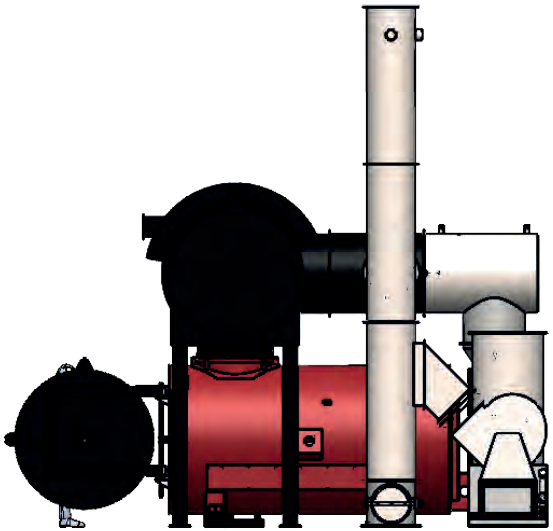

MATERIAL:	FINISH:
N/A	N/A

WEIGHT: 0.00 Kg

THIRD ANGLE PROJECTION
(UNLESS STATED OTHERWISE)

TOLERANCES UNLESS OTHERWISE STATED

FABRICATION		MACHINING		ANGULAR
2 to 30	± 1	0.5 up to 3	± 0.05	up to 400 ± 45'
>30 up to 120	± 2	>3 up to 6	± 0.05	>400 up to 1000 ± 30'
>120 up to 400	± 2	>6 up to 30	± 0.1	>1000 ± 20'
>400 up to 1000	± 3	>30 up to 120	± 0.15	
>1000 up to 2000	± 4	>120 up to 400	± 0.2	
>2000 up to 4000	± 6	>400 up to 1000	± 0.3	
>4000 up to 8000	± 8	>1000 up to 2000	± 0.5	
>8000 up to 120000	± 10	>2000 up to 4000	± 0.5	
>12000 up to 16000	± 12			
>16000 up to 20000	± 14			
>20000	± 16			

addfield
Incinerate • Cremate

T: +44 (0)1543 571 280
F: +44 (0)1543 571 173
E: sales@addfield.com
www.addfield.com

Addfield Environmental Systems LTD
Unit 9, Zone 4
Burntwood Business Park
Staffordshire
WS7 3XD

PROJECT:

C200 with WS

TITLE:

Sale GA

	DATE	DRAWN	CHECKED	APPROVED
D				
C				
B				
A				
-	04/08/2022	A.SKIDMORE		

COMMENTS

ZONES: XX

ISSUE FOR MANUFACTURE

Addfield Environmental Systems LTD
This drawing and any information or descriptive material set out on it are the confidential and copyright propertyof Addfield Enviromental Systems, and MUST NOT BE DISCLOSED, COPIED, LOANED in whole or part or used for any purpose without the written permission of Addfield Enviromental Systems.

DRAWING No. C200 WS Sale GA

REV -

SHEET 1 OF 1

SCALE: 1:60

A3